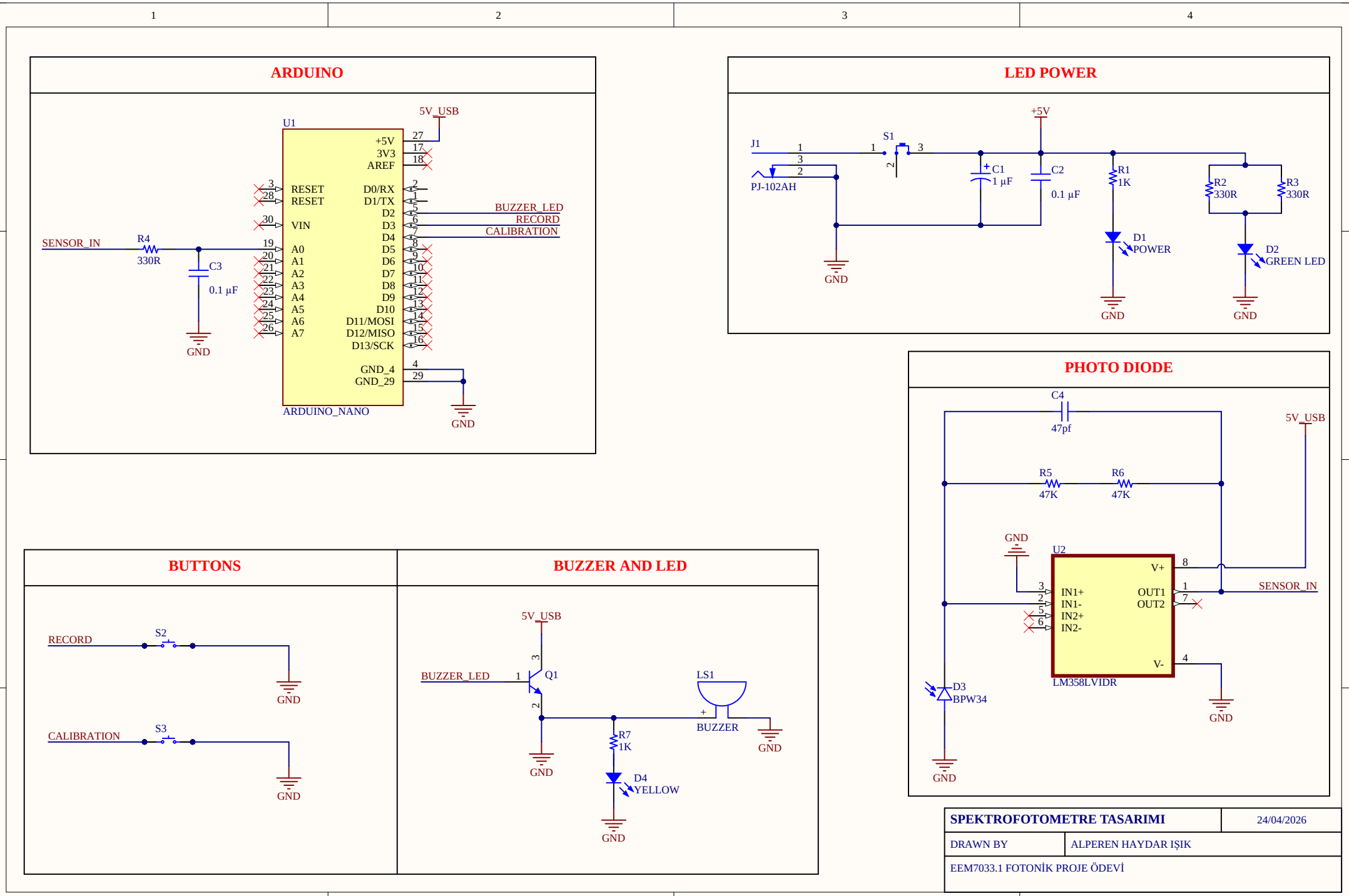
ARDUINO
U1
5V_USB
+5V
3V3
AREF
RESET
RESET
VIN
A0
A1
A2
A3
A4
A5
A6
A7
D0/RX
D1/TX
D2
D3
D4
D5
D6
D7
D8
D9
D10
D11/MOSI
D12/MISO
D13/SCK
GND_4
GND_29
ARDUINO_NANO
BUZZER_LED
RECORD
CALIBRATION
SENSOR_IN
R4
330R
C3
0.1 µF
GND
LED POWER
J1
PJ-102AH
S1
C1
1 µF
C2
0.1 µF
+5V
R1
1K
R2
330R
R3
330R
D1
POWER
D2
GREEN LED
GND
PHOTO DIODE
C4
47pf
5V_USB
R5
47K
R6
47K
U2
V+
IN1+
IN1-
IN2+
IN2-
OUT1
OUT2
V-
LM358LVIDR
SENSOR_IN
D3
BPW34
GND
BUTTONS
RECORD
S2
CALIBRATION
S3
GND
BUZZER AND LED
5V_USB
BUZZER_LED
Q1
LS1
BUZZER
R7
1K
D4
YELLOW
GND
SPEKTROFOTOMETRE TASARIMI
24/04/2026
DRAWN BY
ALPEREN HAYDAR IŞIK
EEM7033.1 FOTONİK PROJE ÖDEVİ